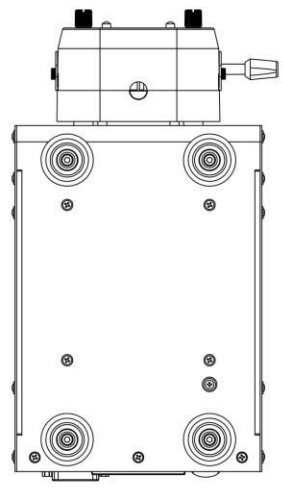

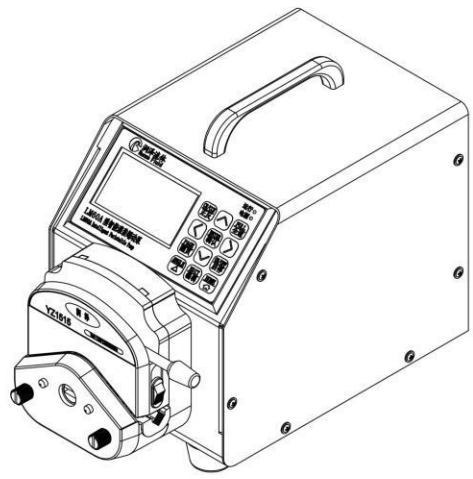

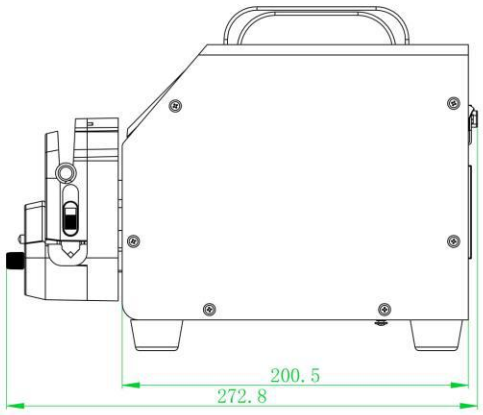
200.5
272.8

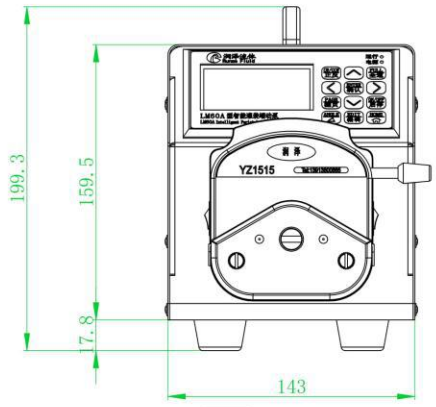
199.3
159.5
17.8
143

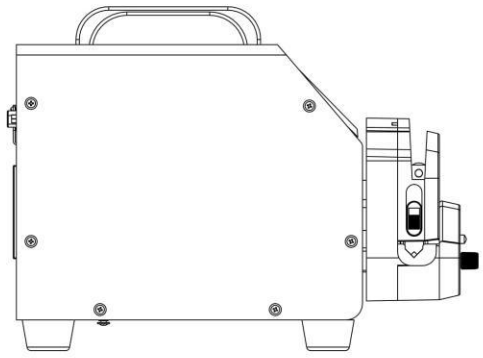

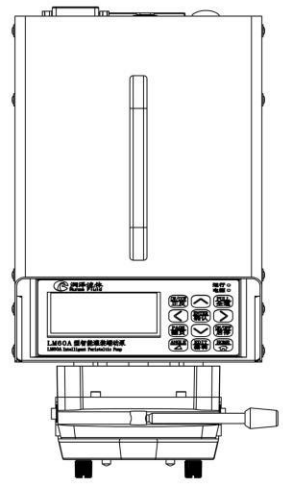

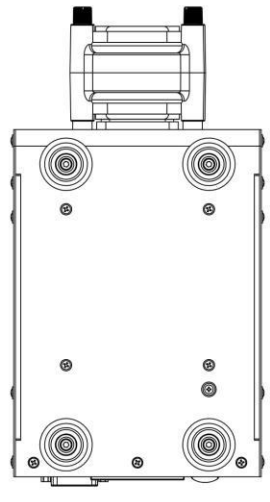

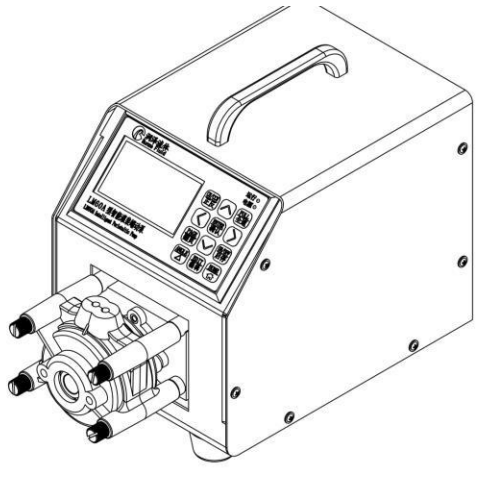

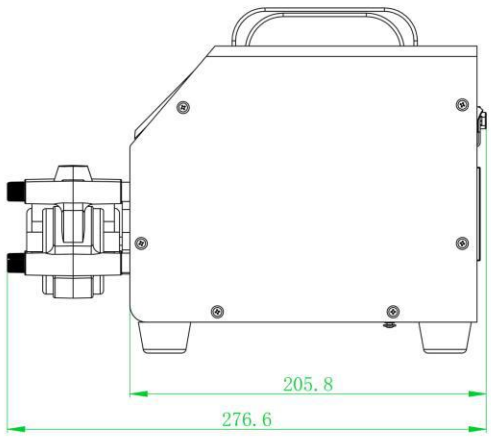
205.8
276.6

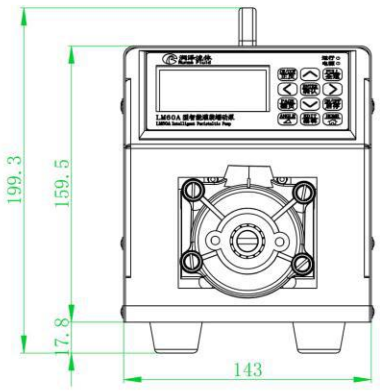
199.3
159.5
17.8
143

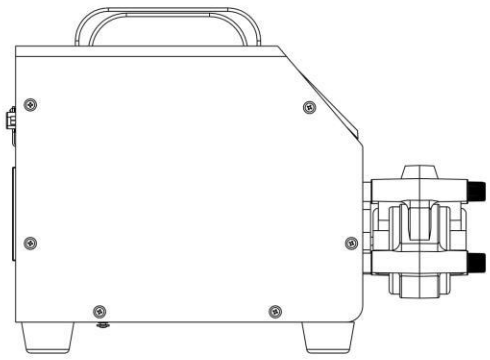

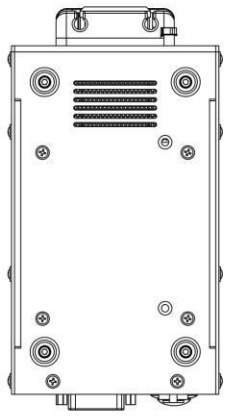

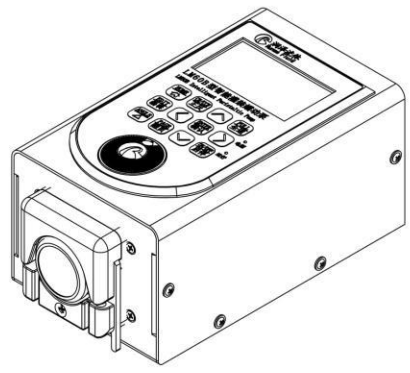

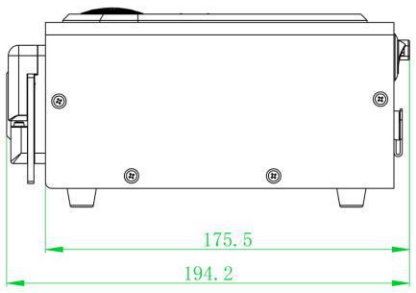
175.5
194.2

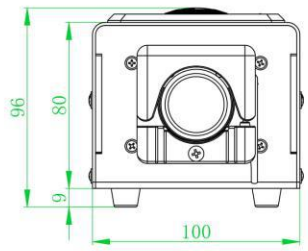
96
80
9
100

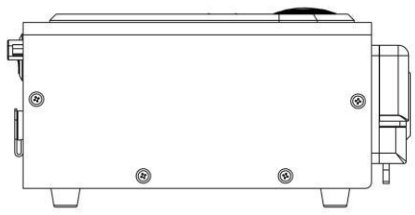

LM60B型智能蠕动泵
LM60B Intelligent Peristaltic Pump